[Faulty model]: iPad Air

[Fault phenomenon]: Bright screen machine is hot

The customer described that the machine is fine when the screen is off, and the machine is hot when the screen is bright.

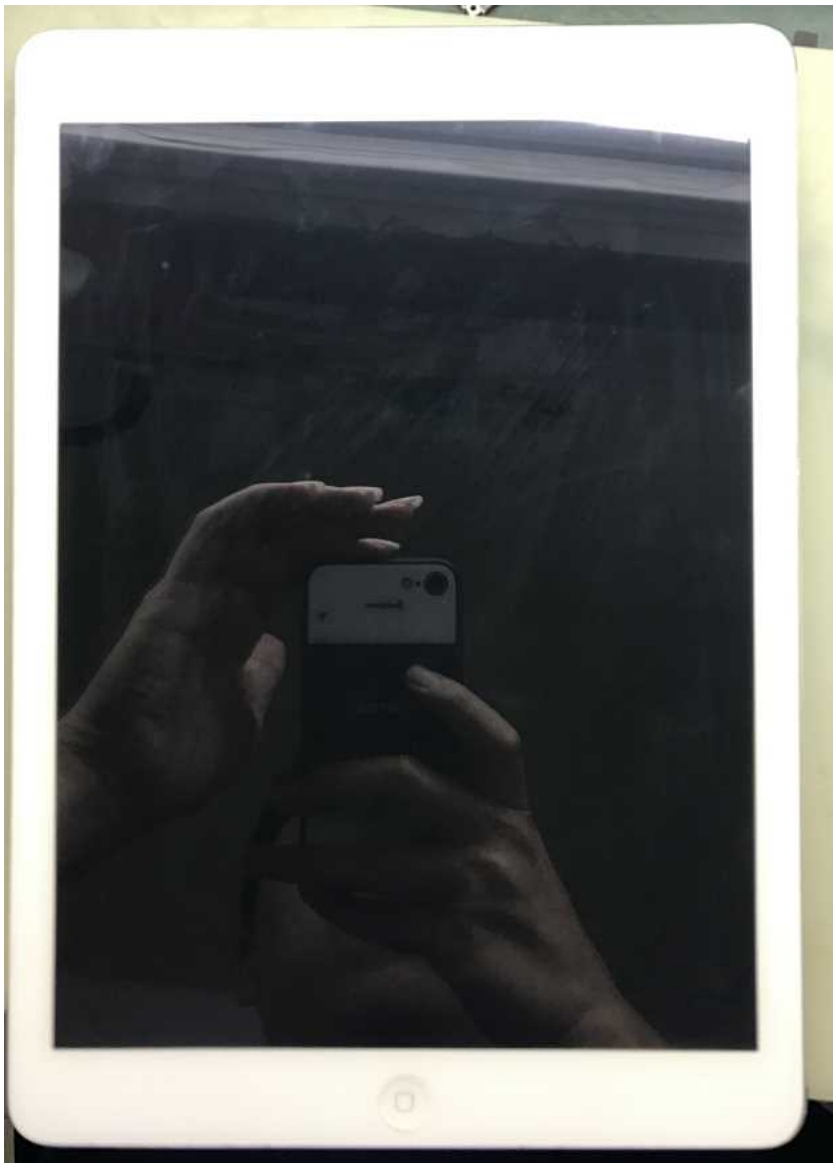

[Fault Analysis]:

When the flat panel is off, it is normal. When the screen is bright, it is hot and severe, and the fault is mainly related to some circuits on the screen.

[Maintenance process]:

Disassemble the boot, in the case of bright screen, the power supply is very hot, smoked Colophony (Solder) see is the first place to melt, thinking that it is the problem of the power supply, directly replace one, or the same phenomenon.

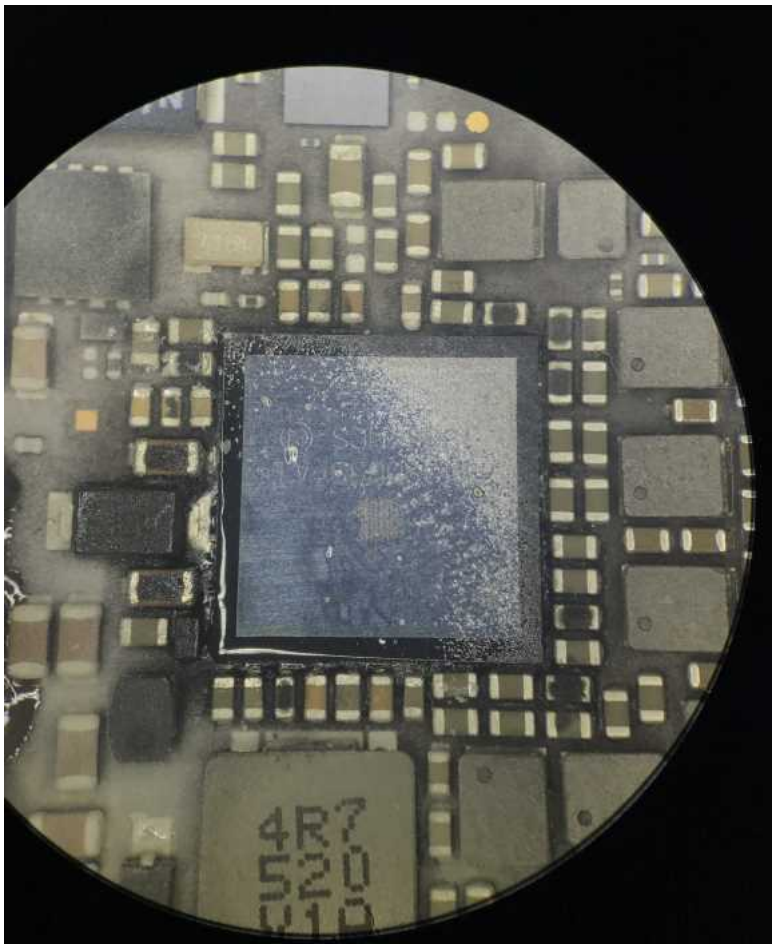

Disassemble the switch, the measurement shows the connector J7000 39 41 pin PPLED_BACK_REG_B is not normal to the ground diode value,

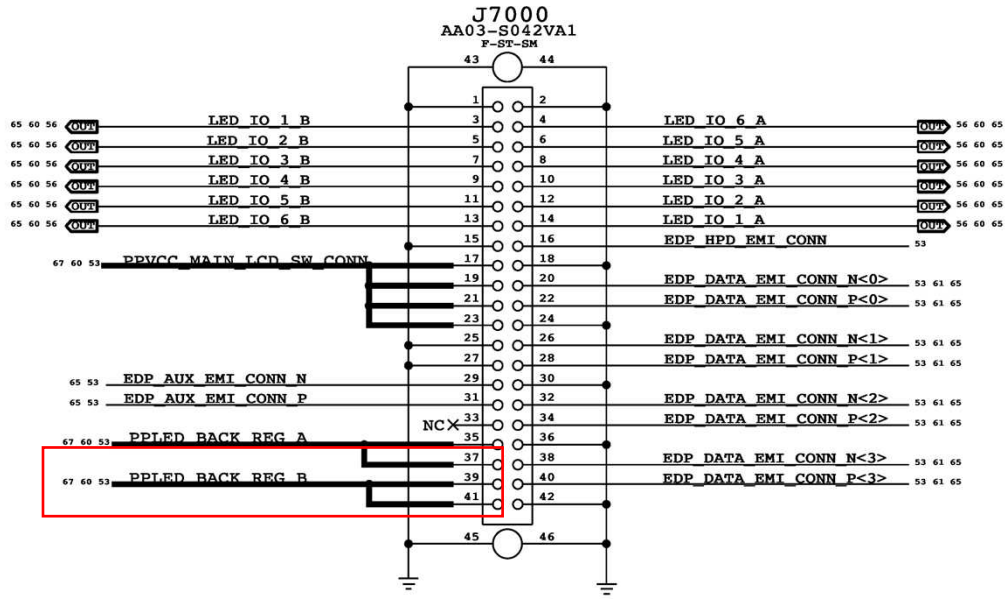



Looking forward, the measurement found that the d8258 diode is open, and if it is normal, there is a dipole value of 136.

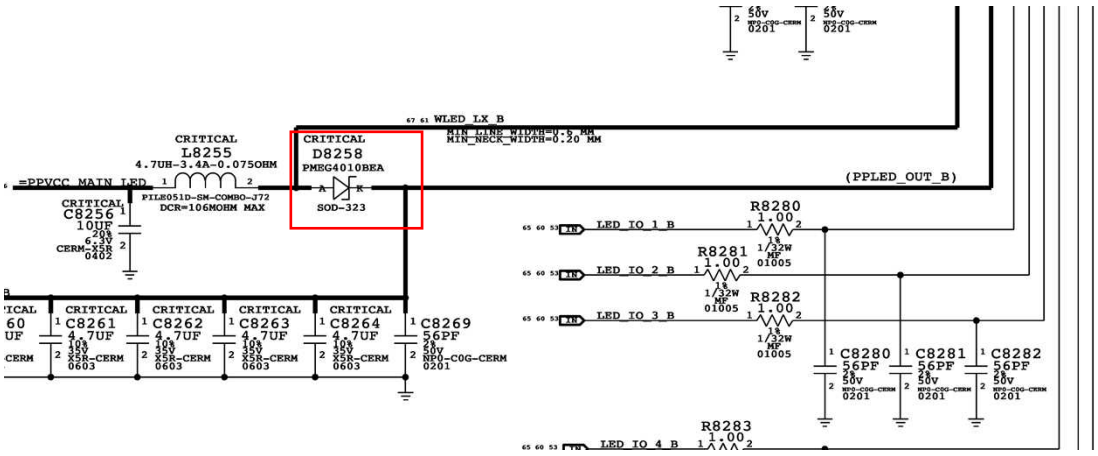



Replace this diode directly and measure normally.


FLUKE
0.136
HOLD
RANGE
OFF

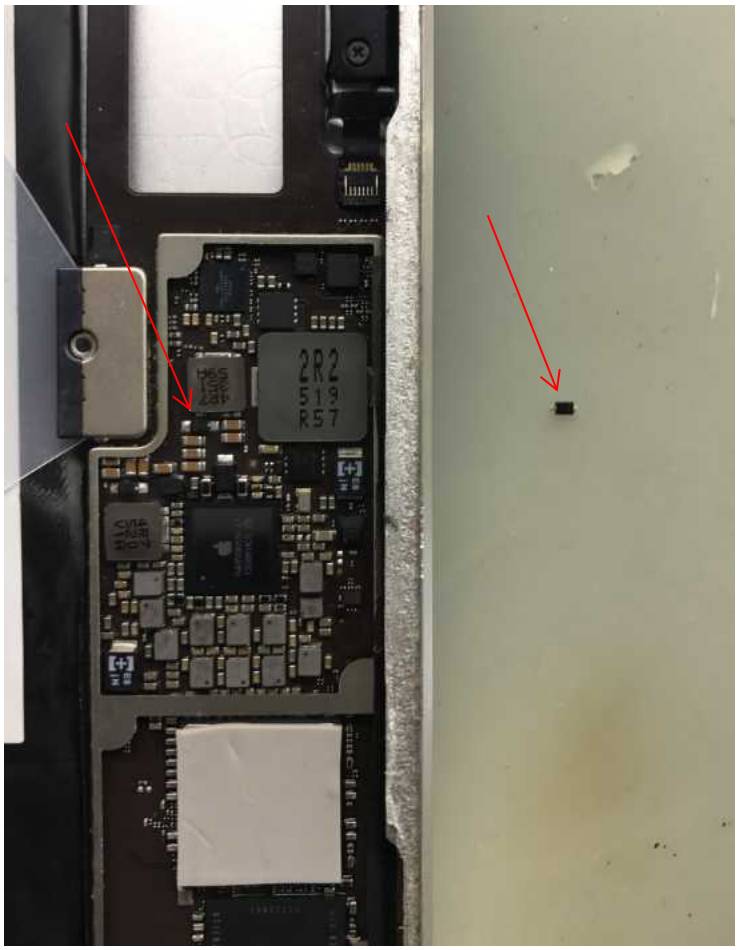

Showing connector J7000 39 41 pin PPLED_BACK_REG_B to the ground diode value returned to normal.



[Maintenance results]:

Installed test, in the case of bright screen, it is not hot, the repair is over, this fault is caused by the d8258 diode damage caused by the bright screen machine is hot.


, do not
e battery
ntacts or
peratures
erly. Read
attery.
2R2
519
R57

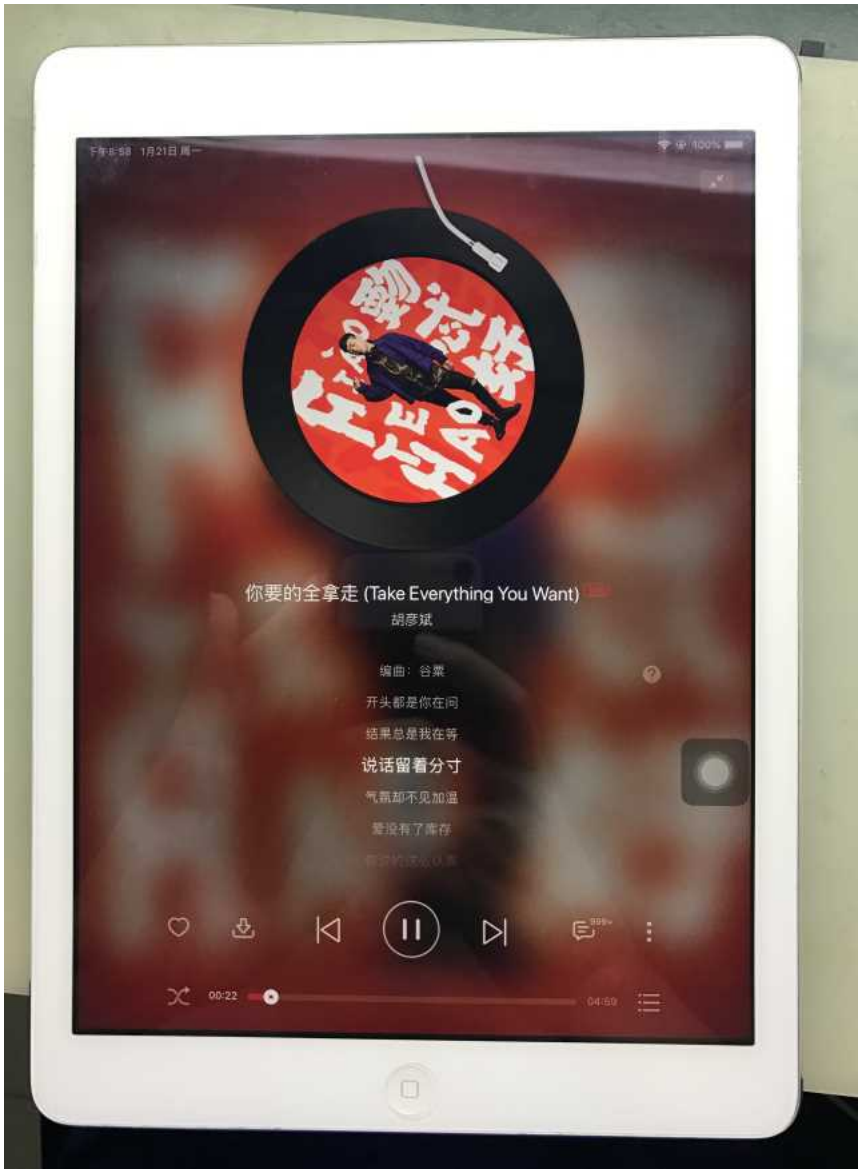
你要的全拿走 (Take Everything You Want)
胡彦斌
编曲：谷景
开头都是你在问
结果总是我在等
说话留着分寸
气氛都不见加温
爱没有了库存
00:22
04:59